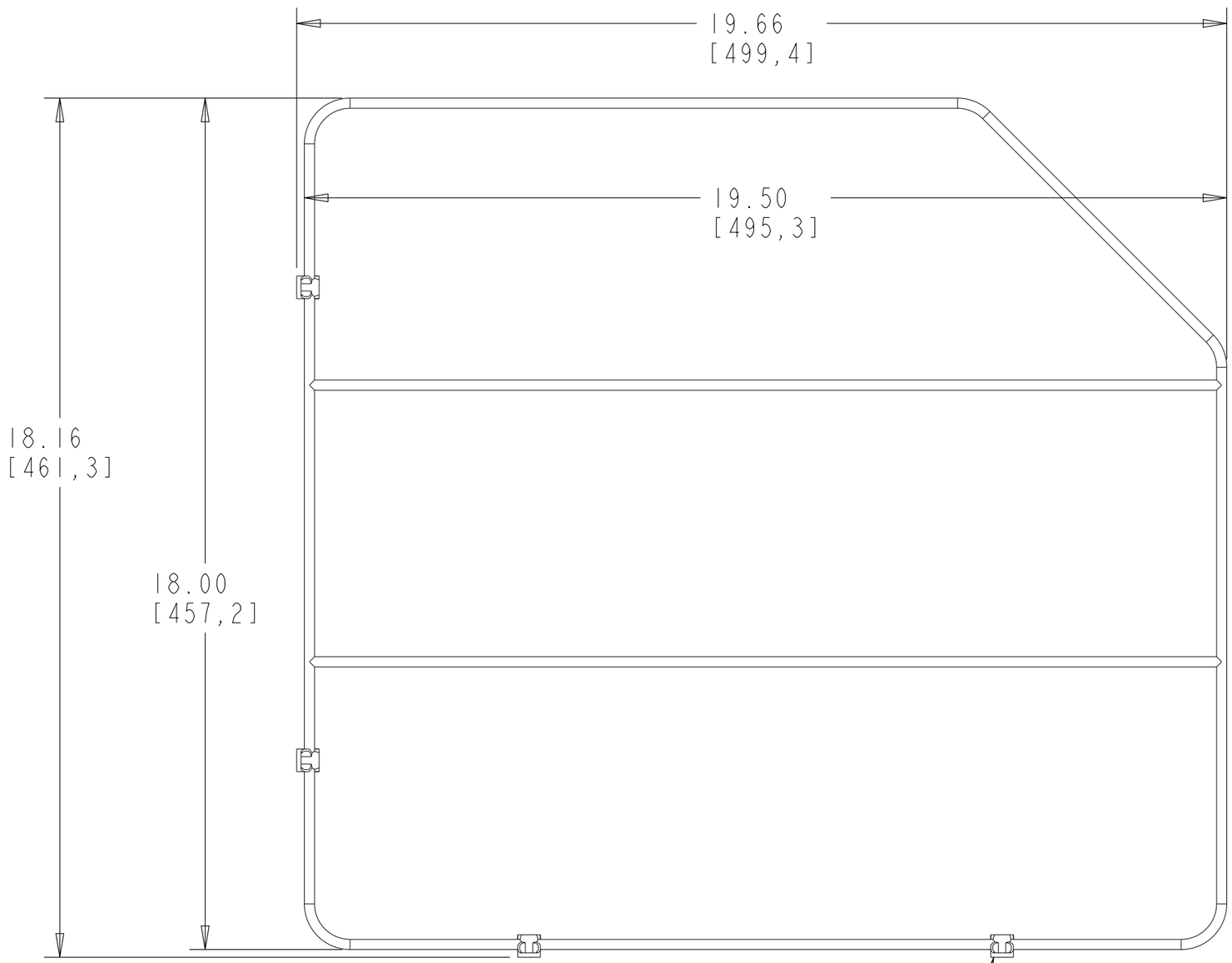

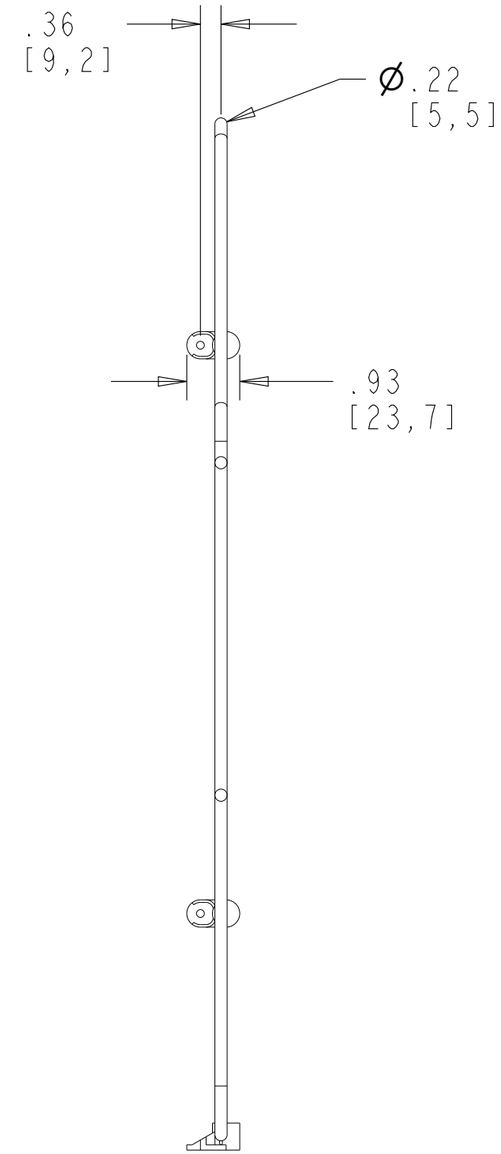

PART NO.	FINISH
597-18-52	WHITE
597-18CR-52	CHROME

NOTE: FEET CAN BE PLACED ANYWHERE ALONG WIRE AS NEEDED FOR CUSTOMER APPLICATION.

CUSTOMER DRAWING

REV.	DATE	BY	DESCRIPTION OF CHANGE

INCH [MM] — AMERICAN PROJECTION

	BY	DATE
DRAWN	LCS	8/01/22

TOLERANCES
MAT. DEC.
(WOOD) .XX ±.03 [.8mm]
(OTHER) .XX ±.02 [.5mm]
(ALL) .XXX ±.005 [.13 mm]
FRACTIONS ±1/32 [.8 mm]
ANGLES ±1/2°

REV-A-SHELF® INC.

SIZE B — 18" TRAY DIVIDER W/ CLIPS

MATERIAL

FINISH

DRAWING NO. 597-18**-52

SCALE 0.375

PART NO. 597-18**-52

SHEET 1 OF 2

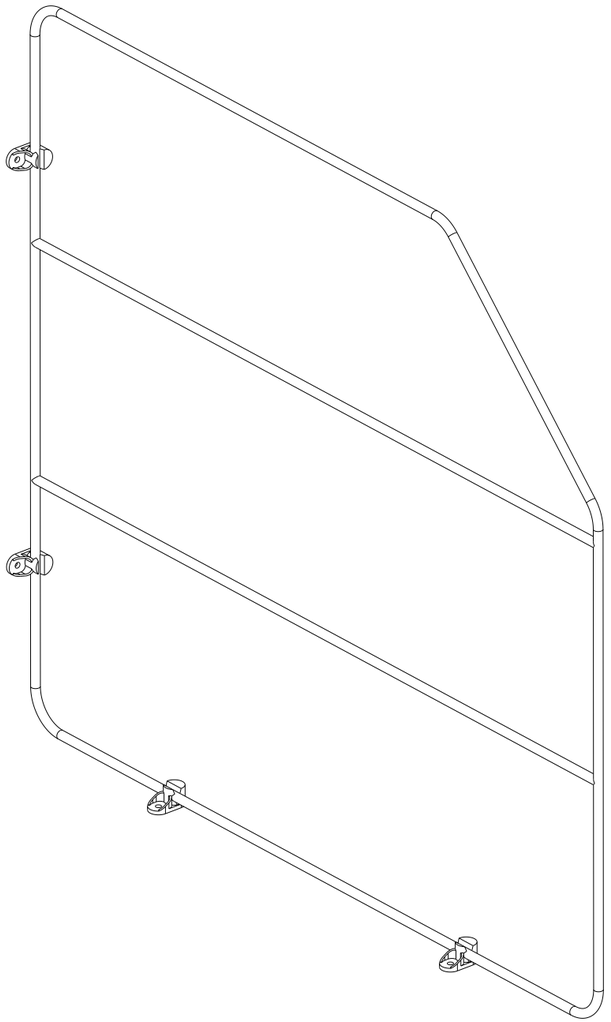

PART DIMENSIONS	
WIDTH	0.93 [23,7]
DEPTH	19.66 [499,4]
HEIGHT	18.16 [461,3]

MIN CABINET OPENING				
	FACE FRAME	FRAMELESS	INSET FACE FRAME	INSET FRAMELESS
WIDTH	3.00 [76,2]	3.00 [76,2]	3.00 [76,2]	3.00 [76,2]
DEPTH	19.75 [502]	19.75 [502]	20.50 [521]	20.50 [521]
HEIGHT	18.25 [464]	18.25 [464]	18.25 [464]	18.25 [464]

SLIDE SPECIFICATIONS				
SLIDE MANUFACTURER	N/A			
SLIDE PART NUMBER	N/A	RELEASE PART NUMBER	N/A	
SLIDE TYPE	N/A	SLIDE EXTENSION	N/A	MAX WEIGHT RATING
SLIDE CLOSING	N/A	SLIDE LENGTH	N/A	
SLIDE MOUNTING	N/A	SLIDE FINISH	N/A	N/A

PART NO.	FINISH
597-18-52	WHITE
597-18CR-52	CHROME

CUSTOMER DRAWING

REV.	DATE	BY	DESCRIPTION OF CHANGE

INCH [MM]

AMERICAN PROJECTION

	BY	DATE
DRAWN	LCS	8/01/22

TOLERANCES
MAT. DEC.
(WOOD) .XX ±.03 [.8mm]
(OTHER) .XX ±.02 [.5mm]
(ALL) .XXX ±.005 [.13 mm]
FRACTIONS ±1/32 [.8 mm]
ANGLES ±1/2°

REV-A-SHELF® INC.

SIZE B

18" TRAY DIVIDER W/ CLIPS

MATERIAL

FINISH

DRAWING NO. 597-18**-52

SCALE 0.300

PART NO. 597-18**-52

SHEET 2 OF 2